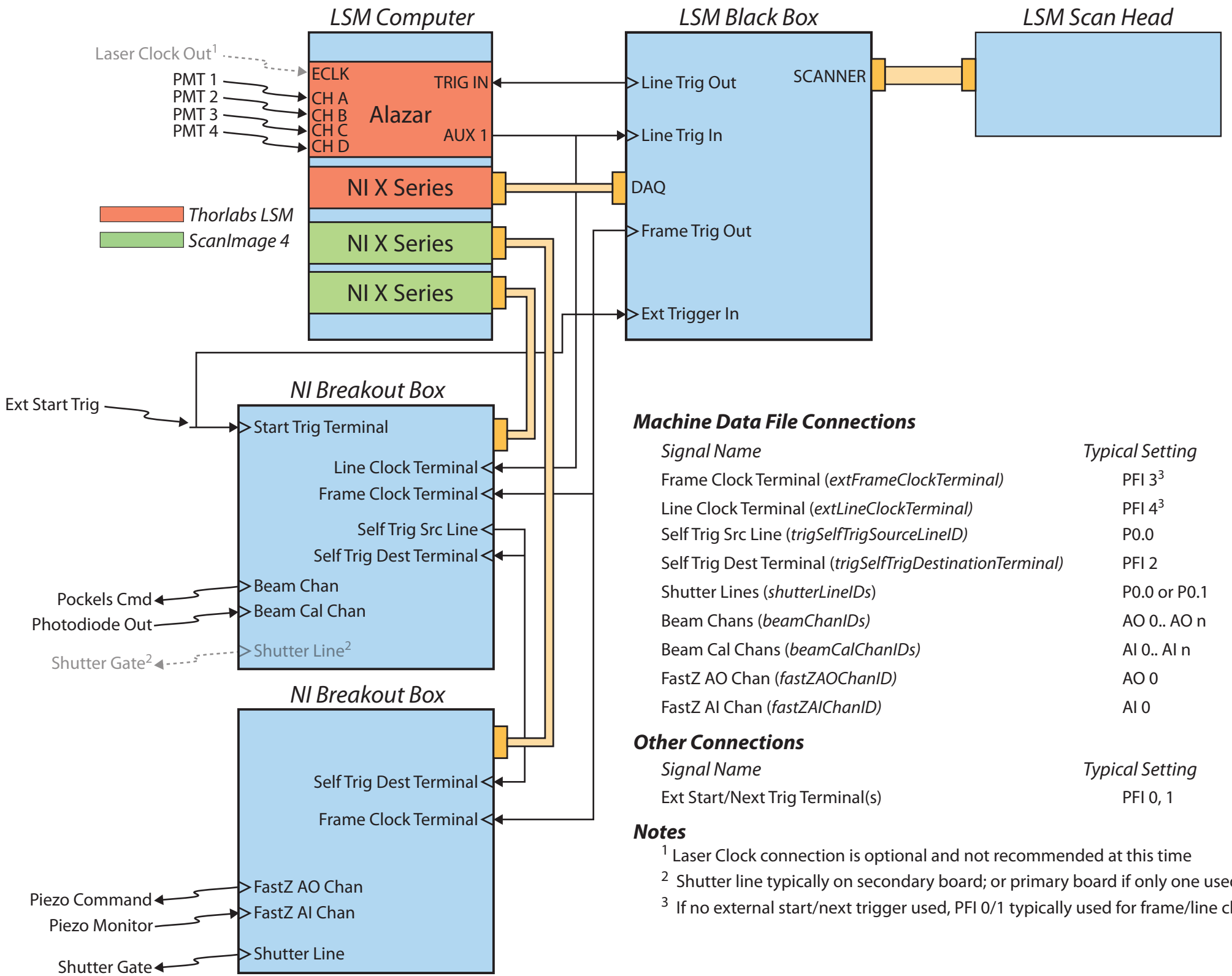

Machine Data File Connections

Signal Name	*Typical Setting*
Frame Clock Terminal (*extFrameClockTerminal*)	PFI 3[3]
Line Clock Terminal (*extLineClockTerminal*)	PFI 4[3]
Self Trig Src Line (*trigSelfTrigSourceLineID*)	P0.0
Self Trig Dest Terminal (*trigSelfTrigDestinationTerminal*)	PFI 2
Shutter Lines (*shutterLineIDs*)	P0.0 or P0.1
Beam Chans (*beamChanIDs*)	AO 0.. AO n
Beam Cal Chans (*beamCalChanIDs*)	AI 0.. AI n
FastZ AO Chan (*fastZAOChanID*)	AO 0
FastZ AI Chan (*fastZAIChanID*)	AI 0

Other Connections

Signal Name	*Typical Setting*
Ext Start/Next Trig Terminal(s)	PFI 0, 1

Notes

[1] Laser Clock connection is optional and not recommended at this time

[2] Shutter line typically on secondary board; or primary board if only one used

[3] If no external start/next trigger used, PFI 0/1 typically used for frame/line clock